Bälz-electrodyn - control valves and control actuators

3.9 Valve serie baelz 344-VA and 344-EM-VA 2-way valve completely in stainless steel

Checklist: 344-VA
ND: 32 - 150
NP: 16 / 25 / 40
standard body:
GX5CrNiMo19-11 (1.4408)
temperatures:
min.: -10°C
max.: +240°C
spindle Ø: 10 mm
S 21: ND 32 - 125
spindle Ø: 22 mm
S 31 / 41: ND 150

Checklist: 344-EM-VA
ND: 50 - 125
NP: 16 / 25 / 40
standard body:
GX5CrNiMo19-11 (1.4408)
temperatures:
min.: -10°C
max.: +225°C
spindle Ø: 10 mm

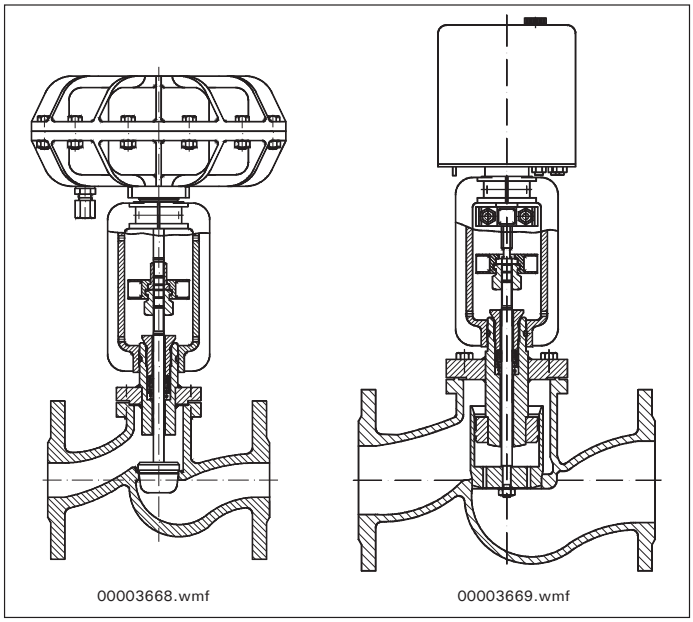

Fig. 38
344-VA-373-P21 344-EM-VA-373-E07

Text for quotations + orders:

2-way control valve in stainless steel
baelz 344-VA
without actuator*1*2
Kvso = 0.004%
body material : GX5CrNiMo19-11 - 1.4408
internal parts in contact with the medium
: X6CrNiMoTi17-12-2 - 1.4571
stuffing box : V-rings in PTFE
NP 16 max. : 240°C/10 bar - 100°C/13,5 bar
20°C/16 bar
NP 25 max. : 240°C/15,5 bar - 100°C/21,5 bar
20°C/25 bar
NP 40 max. : 240°C/25 bar - 100°C/34 bar
20°C/40 bar
stroke ND 32 - 125 : 22 mm
ND 150 : 44 mm
flow : .....
pressure drop
Δp_{100} : ..... bar
max. closing pressure*4
Δp_0 : ..... bar

Text for quotations + orders:

balanced 2-way control valve in stainless steel
baelz 344-EM-VA
without actuator*1*2
for liquid fluids
Kvso = 0.05%
body material : GX5CrNiMo19-11 - 1.4408
internal parts in contact with the medium
: X6CrNiMoTi17-12-2 - 1.4571
stuffing box : V-rings in PTFE
water:
NP 16 max. : 225°C/10,5 bar - 100°C/13,5 bar
20°C/16 bar
NP 25 max. : 225°C/16 bar - 100°C/21,5 bar
20°C/25 bar
NP 40 max. : 225°C/26 bar - 100°C/34 bar
20°C/40 bar
steam:
NP 16 max. :150°C/3,5 bar
stroke ND 50 - 125 : 22 mm
flow : .....
pressure drop
Δp_{100} : ..... bar
max. closing pressure*4
Δp_0 : ..... bar

*1
electric actuator
see 373-EXX page 81 - 90

*3
available Kvs values
see page 5

*1
pneumatic actuator
see 373-PXX page 104 - 110

*4
pressure Δp_0
see page 7 - 9

*3

ND	32	40	50	65	80	100	125	150
Kvs	16	25	34	54	72	97	122	196

Rights reserved to make technical changes